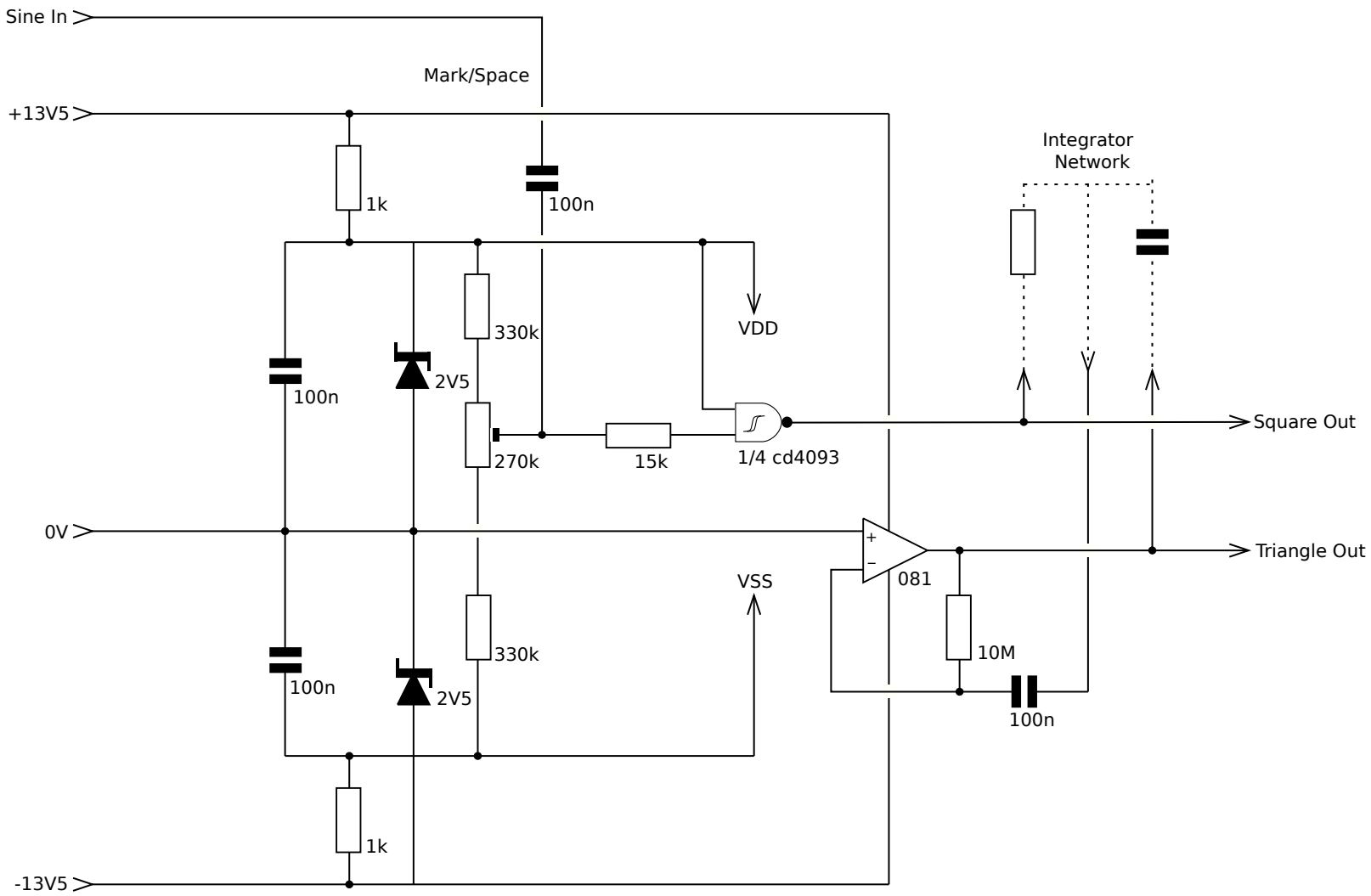

	Title: Sig Gen Square Triangle	**Date:** 19 July 2018	**Drn.** W.G.	**Rev.** 1.0	**Sheet:** 01 / 01